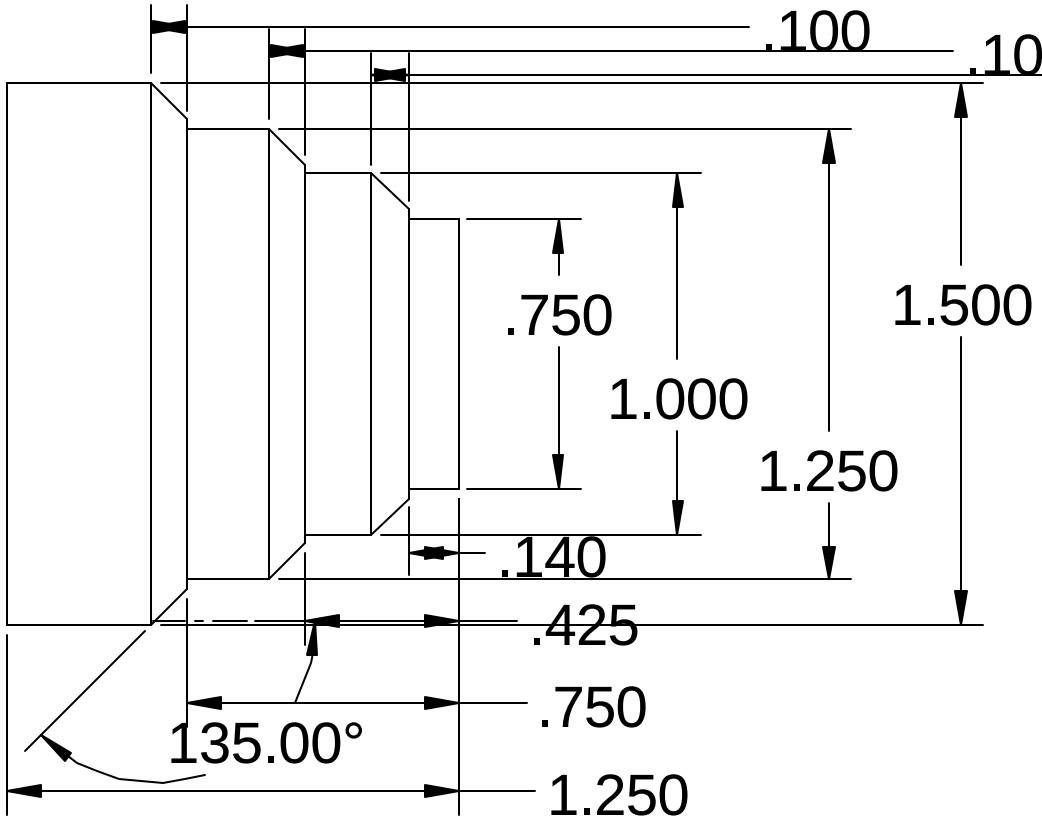

38 mm reflector
(measurements in inches)

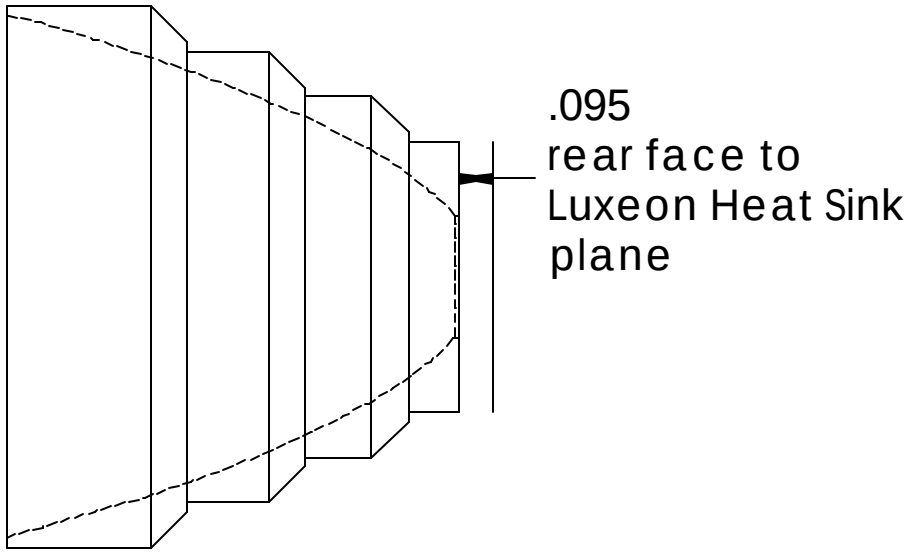

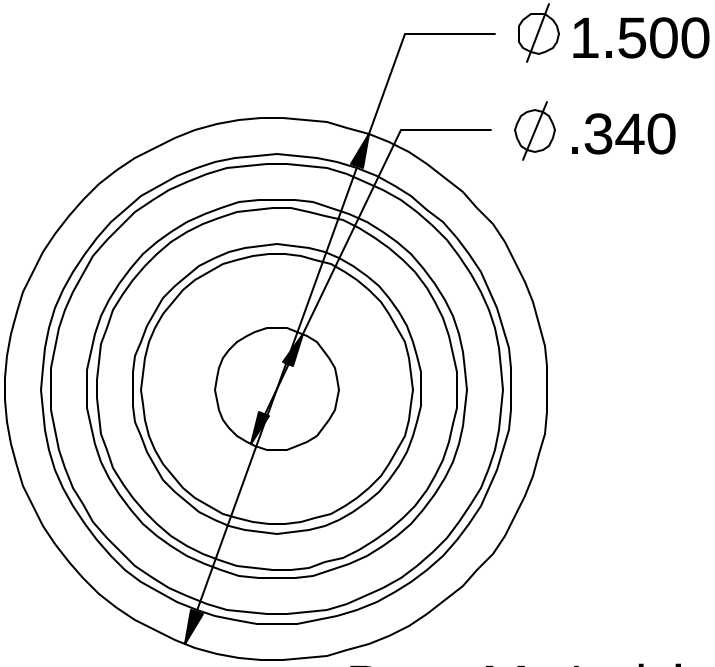

Don McLeish 7-1-04